ALPHA CLIMA
ΣΑΤΗΡΗΣ ΚΑΡΚΑΣ
ΘΕΡΜΑΝΣΗ-ΚΛΙΜΑΤΙΣΜΟΣ-ΗΛΙΑΚΑ
ΗΛΕΚΤΡΙΚΑ-ΦΥΣΙΚΟ ΑΕΡΙΟ

Midea

Commercial Air Conditioners **2017**


# M-Thermal Heat Pumps
# Mono/Split

R410A -20°C INVERTER

# Renewable

## Heat pump is renewable and energy saving


Heat pumps use electrical energy to capture renewable heat from the air. Typically you can capture 3kW of energy for every 1kW of electrical energy. This means you get 4 kW of heat for only 1kW of electrical input making the unit 400% efficient.

## Why select HPWH?


Comparison of the power needed to heat 1 ton water from 15°C to 55°C

| | Midea HPWH | Gas Water Heater | Electric Water Heater | Boiler | Solar Water Heater* |
|---|---|---|---|---|---|
| Energy Resource | Air,electricity | Gas | Electricity | Diesel oil | Solar,electricity |
| Calorific Value | 860kcal/kW.h | 24000kcal/m3 | 860kcal/kW.h | 10200kcal/kg | 860kcal/kW.h |
| Average Efficiency | 4.6 | 0.8 | 0.95 | 0.7 | 2.7(1/3 weather need Auxiliary Heater) |
| Consumption | 10kW.h | 2.08m3 | 48.9kW.h | 5.6kg | 17.22kW.h |
| Running Cost(USD) | 0.9 | 5.9 | 4.3 | 6.5 | 1.5 |
| Merit/Demerit | Green,safe,energy saving,friendly for environment and easy for installation. | Risk of fire and explosion, emits CO2. | Risk of electric shocks. | Risk of fire and explosion, emits CO2. | Difficult to install, takes up a lot of space, water tank capacity is limited. |

The comparison is under the same condition.

1.* It needs auxiliary heater during rainy/snowy and cloudy days of one year.

2. Data tested in Midea lab and according to local price in China.

# Introduction

## Total heat solution-Heating, cooling, domestic hot water in one system

M-Thermal is an integrated system that heats and cools space, as well as produces domestic hot water. It offers total heat solution all year round. This system can complete instead of the tradition gas or fuel boilers, also can work together with them.


M-Thermal Mono outdoor unit

- Renewable energy source
- R410A, low CO2 emissions, environmentally friendly
- DC inverter technology, high energy efficiency
- Sufficient heating capacity at low ambient temperature (even at-20°C)
- Provide space heating, cooling & domestic hot water, total heat solution
- Compatible with other heat source such as solar energy and boiler

## How air source heat pump works

A heat pump is an energy efficient system that absorbs heat from the ambient air for heating and hot water. By using the ambient air and transferring this heat into the house through a hydronic system, such as floor heating, fan coil units and radiators.


### 1 Stage One

The heat transfer medium (the refrigerant) is colder than the heat source (the outside air). As the outside air passes across the first heat exchanger (the evaporator) the liquid refrigerant absorbs the heat and evaporates.

### 2 Stage Two

The vapor passes to the compressor and is compressed. When compressed the pressure is increased and the temperature of the vapor rises, effectively concentrating the heat.

### 3 Stage Three

The hot vapor passes to the second heat exchanger (the condenser) where the heat is released to the water and the vapor condenses back into a liquid. The water heated in by the M-Thermal system is circuit to the indoors for central heating and domestic hot water heating.

### 4 Stage Four

The liquid refrigerant passes through an expansion valve, reducing its pressure and temperature, ready to start the next circuit.

- Built-in backup electric heater for additional heating during extremely cold outdoor temperatures. The capacity of electric heater is adjustable.
- Heating, cooling & domestic hot water, total heat solution.
- Wide operation temperature range & Wide water outlet temperature range.

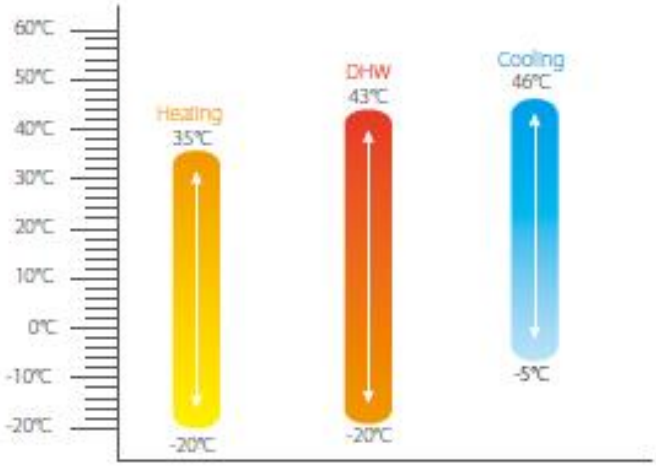


Ambient operation temperature

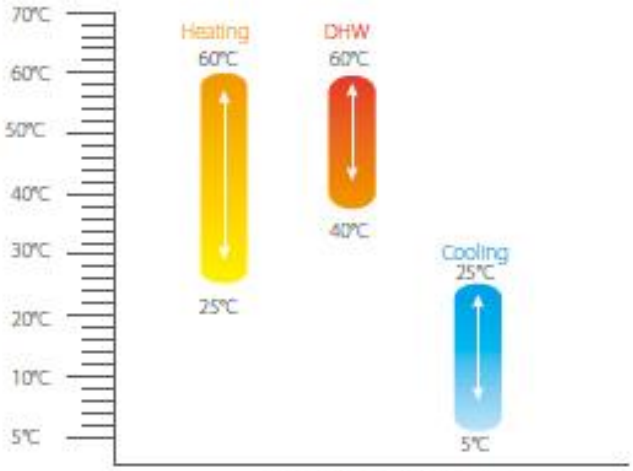


Water outlet temperature

- Compatible with additional heat sources (AHS), including solar energy, fuel boiler, gas boiler and so on. AHS can work together with heat pump or alternative for space heating and domestic hot water dependent on the system control.

## Easy installation & Easy maintenance

- All hydronic components are located within the outdoor unit.
- Water pipes run indoors from the outdoor unit, only need to connect water piping.
- Compact structure, easy for transportation and installation.
- Two doors design for easy access to inner parts for easy maintenance.

Door 1: Access to hydronic compartments and electrical parts

Door 2: Access to refrigerant compartments and electrical parts.

## Flexible operation & More comfort

- Weather dependent operation with climate correlation to ensure absolute comfort climate correlation curve curves for choice. Once the curve is selected, the unit set the outlet water temperature automatically according to the outdoor ambient temperature.

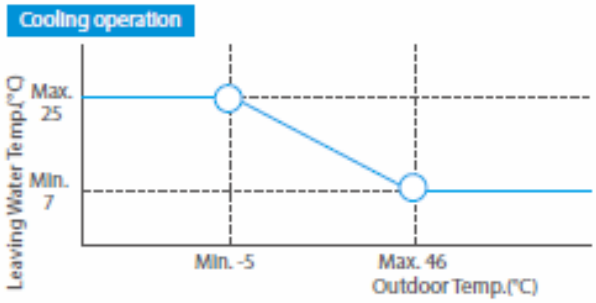


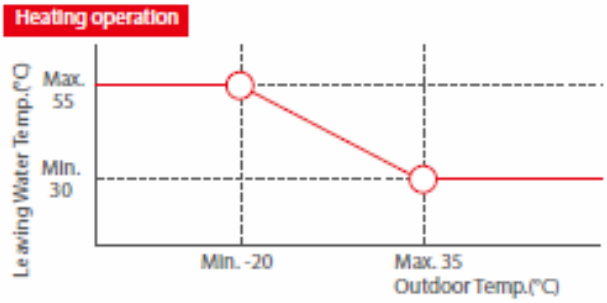


- Two zones control mre flexibility

Temperature of each zone is separately controlled. Two zones control reduces water pump cycle time and save energy.

Two zones control with one user Interface

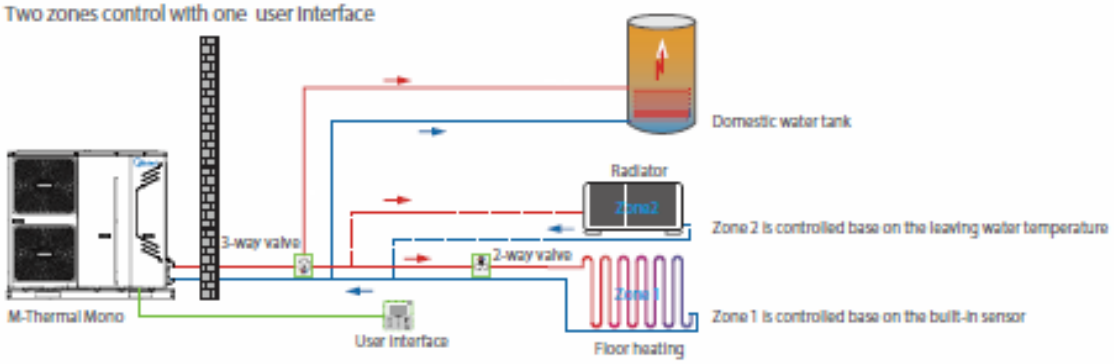


Two zones control with one user Interface and thermostat

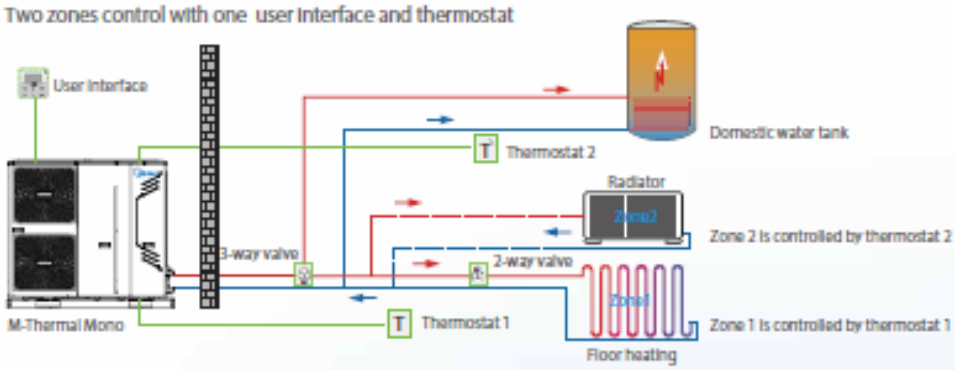


- Priority setting function and multi modes choice


- Special functions such as air purge, preheating for floor and floor drying up for choice

# M-Thermal Mono applications

## Application 1: M-Thermal Mono for space heating only

The room thermostat is used as a switch. When there is a heating request from the room thermostat, the Mono unit operates to achieve the target water temperature that set on the user interface. When the room temperature achieves the thermostat's set point, Mono unit stops operation.

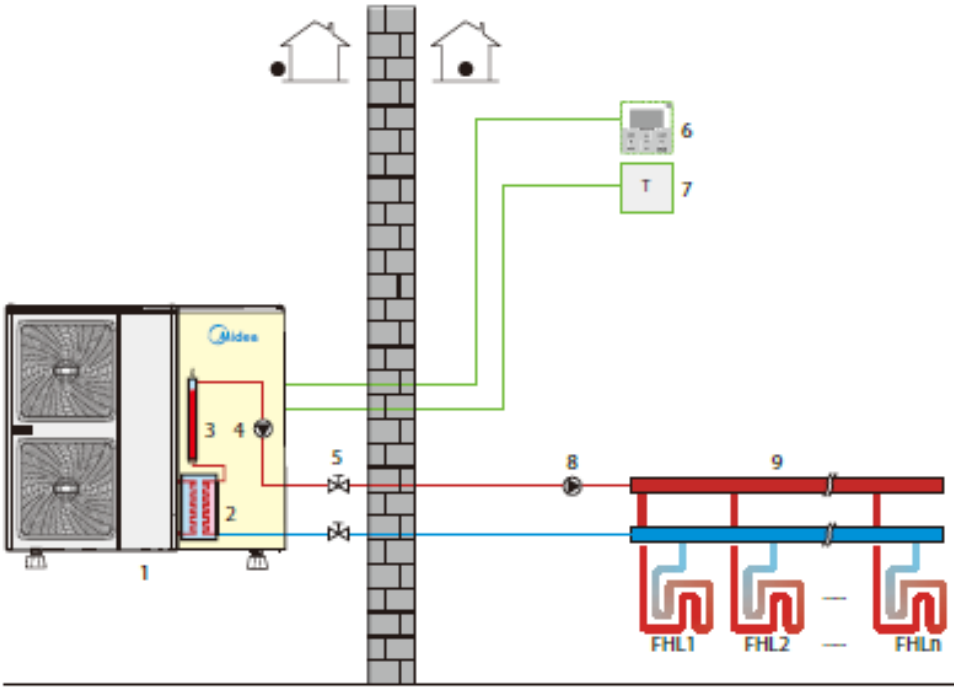


1 Outdoor unit
2 Plate heat exchanger
3 Backup heater
4 Inside circulation pump
5 Stop valve (field supply)
6 User interface
7 Room thermostat (field supply)
8 Outside circulate pump (field supply)
9 Collector (field supply)
FHL 1....n Floor heating loop (field supply)

## Application 2: M-Thermal Mono for space heating and domestic hot water

Room thermostat is not connected to the Mono unit but to motorized valve. Each room's temperature is regulated by the motorized valve on every water circuit. Sanitary hot water is delivered by the domestic hot water tank connected to the Mono unit. In this situation, bypass valve is necessary.

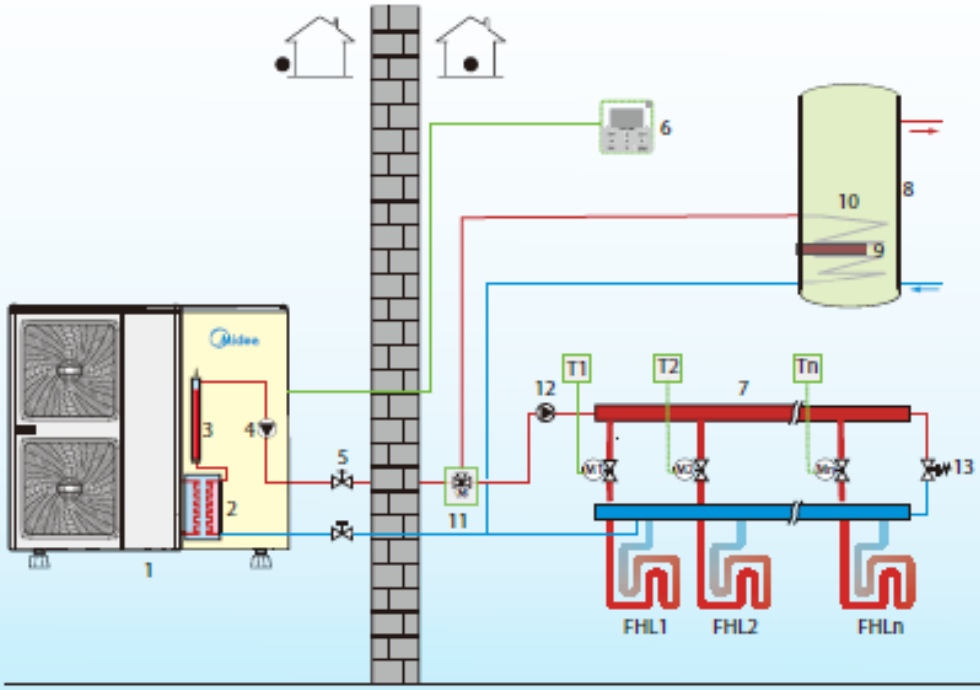


1 Outdoor unit
2 Plate heat exchanger
3 Backup heater
4 Inside circulation pump
5 Stop valve (field supply)
6 User interface
7 Collector (field supply)
8 Domestic water tank (field supply)
9 Booster heater
10 Heat exchanger coil
11 Motorized 3-way valve (field supply)
12 Outside circulate pump (field supply)
13 Bypass valve (field supply)
FHL 1....n Floor heating loop (field supply)
M1...n Motorized valve (field supply)
T1....n Room thermostat (field supply)

## Application 3: M-Thermal Mono for space heating, space cooling and domestic hot water

Floor heating coils and fan coil units are for space heating. Fan coil units used for space cooling. Sanitary hot water is delivered by the domestic hot water tank connected to the Mono unit. The unit will switch to heating or cooling mode according to the temperature detected by the room thermostat. In space Cooling mode, the 2-way valve closes to prevent cold water entering to the floor heating loops.

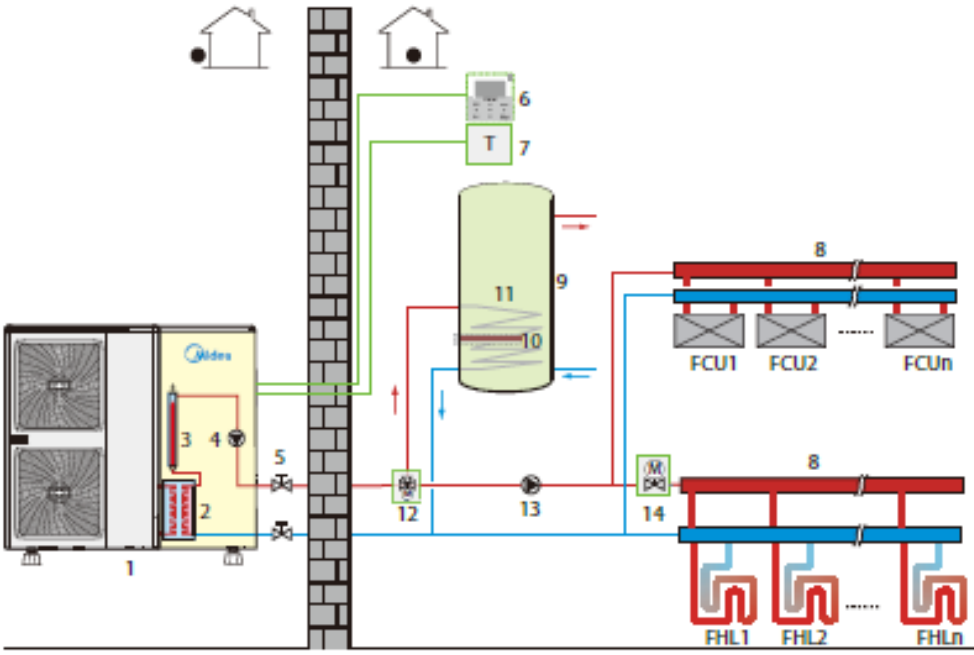


1 Outdoor unit
2 Plate heat exchanger
3 Backup heater
4 Inside circulation pump
5 Stop valve (field supply)
6 User interface
7 Room thermostat (field supply)
8 Collector (field supply)
9 Domestic water tank (field supply)
10 Booster heater
11 Heat exchanger coil
12 Motorized 3-way valve (field supply)
13 Outside circulate pump (field supply)
14 Motorized 2-way valve (field supply)
FHL 1...n Floor heating loop (field supply)
FCU 1...n Fan coil units (field supply)

## Application 4: M-Thermal Mono for space heating and space cooling

Space cooling and heating application without a room thermostat connected to the unit, but with a heating only room thermostat controlling the floor heating and a heating/cooling thermostat controlling the fan coil units. Heating is provided through floor heating loops and fan coil units. Cooling is provided through the fan coil units only.

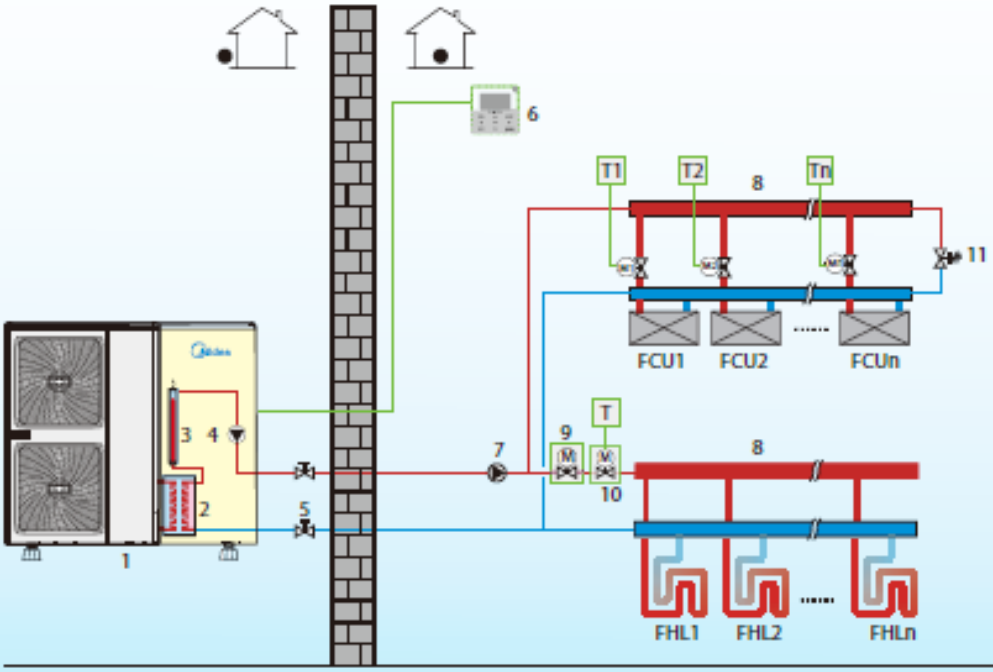


1 Outdoor unit
2 Plate heat exchanger
3 Backup heater
4 Inside circulation pump
5 Stop valve (field supply)
6 User interface
7 Outside circulate pump (field supply)
8 Collector (field supply)
9 Motorized 2-way valve (field supply)
10 Motorized 2-way valve (field supply)
11 Bypass valve (field supply)
FHL 1...n Floor heating loop (field supply)
FCU 1...n Fan coil units (field supply)
M1...n Motorized valve (field supply)
T1...n Room thermostat (field supply)

- Application 5: Bivalent application, M-Thermal Mono and auxiliary boiler for space heating and domestic hot water. Typically there are 3 application situations

5-1 Auxiliary boiler only provide heating for space heating

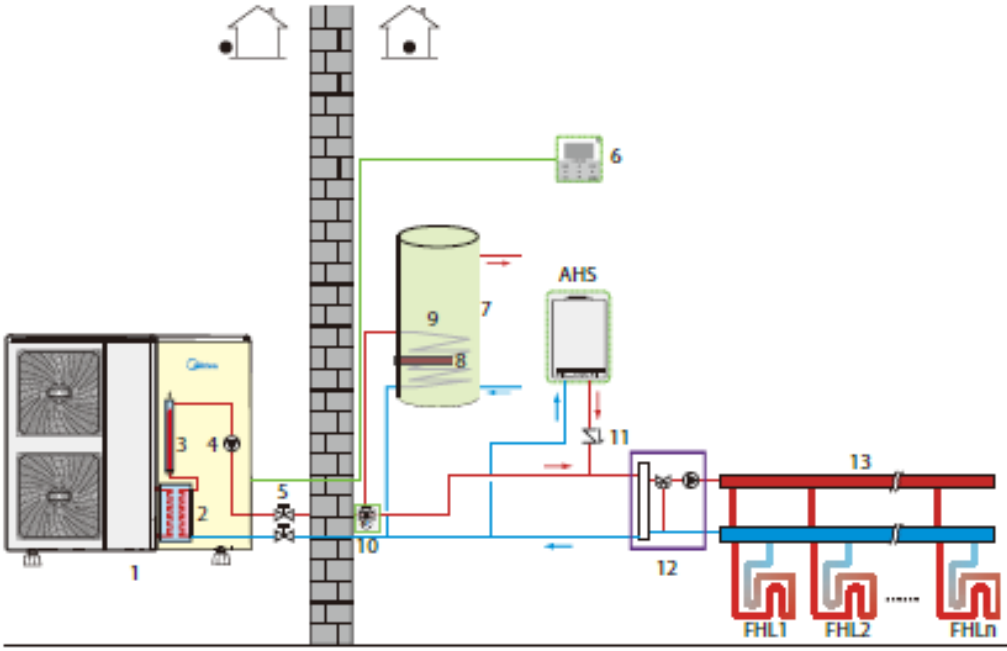


1 Outdoor unit
2 Plate heat exchanger
3 Backup heater
4 Inside circulation pump
5 Stop valve(field supply)
6 User interface
7 Domestic water tank(field supply)
8 Booster heater
9 Heat exchanger coil
10 Motorized3-way valve (field supply)
11 Non-return valve(ild supply)
12 Mixing station(field supply)
13 Collector (field supply)
FHL 1...n Floor heating loop (field supply)
AHS Additional heating source(boiler) (field supply)

5-2 Auxiliary boiler provide heating for space heating and domestic hot water

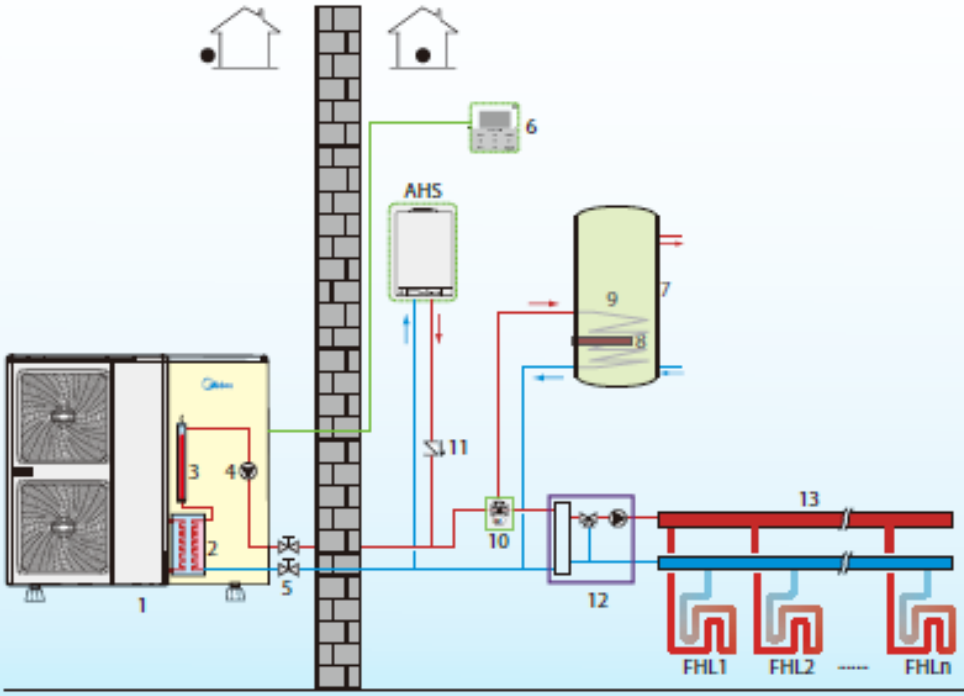


1 Outdoor unit
2 Plate heat exchanger
3 Backup heater
4 Inside circulation pump
5 Stop valve (field supply)
6 User interface
7 Domestic water tank(field supply)
8 Booster heater
9 Heat exchanger coil
10 Motorized 3-way valve (field supply)
11 Non-return valve(field supply)
12 Mixing station(field supply)
13 Collector (field supply)
FHL 1...n Floor heating loop (field supply)
AHS Additional heating source(boiler) (field supply)

5-3 Auxiliary boiler reheats the water from the outdoor unit. An additional 3-way valve should be installed, when the water temperature from Mono unit is not high enough, the 3-way valve opens and the water flow through the boiler and be reheated.

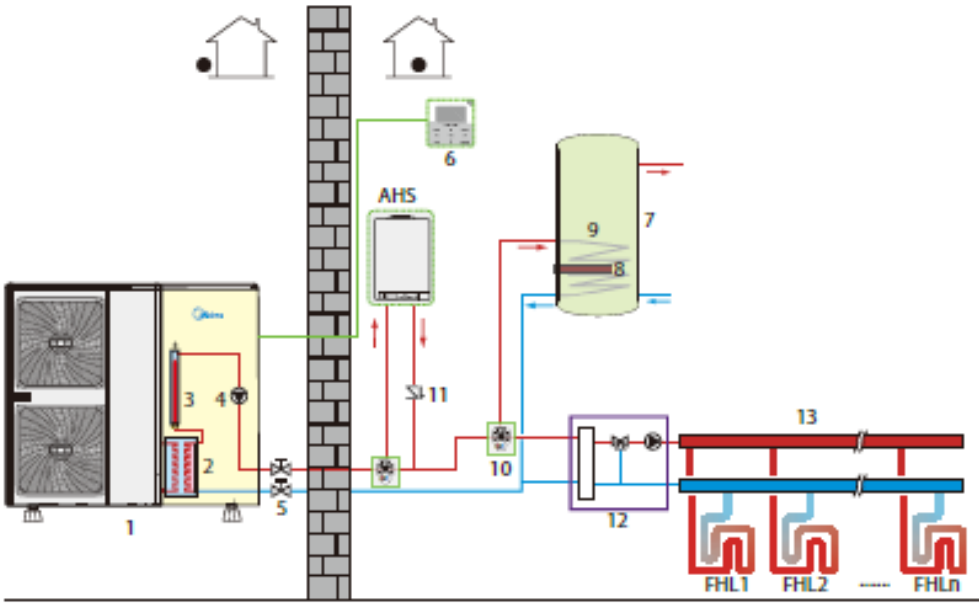


1 Outdoor unit
2 Plate heat exchanger
3 Backup heater
4 Inside circulation pump
5 Stop valve (field supply)
6 User interface
7 Domestic water tank(field supply)
8 Booster heater
9 Heat exchanger coil
10 Motorized 3-way valve (field supply)
11 non-return valve (field supply)
12 mixing station (field supply)
13 Collector (field supply)
FHL 1...n Floor heating loop (field supply)
AHS Additional heating source(boiler) (field supply)

- Application 6: M-Thermal Mono application for space heating through floor heating loops and fan coil units. The floor heating loops and fan coil units require different operating water temperatures.

To achieve these two set points, a mixing station is needed. Room thermostats for each zone are optional.

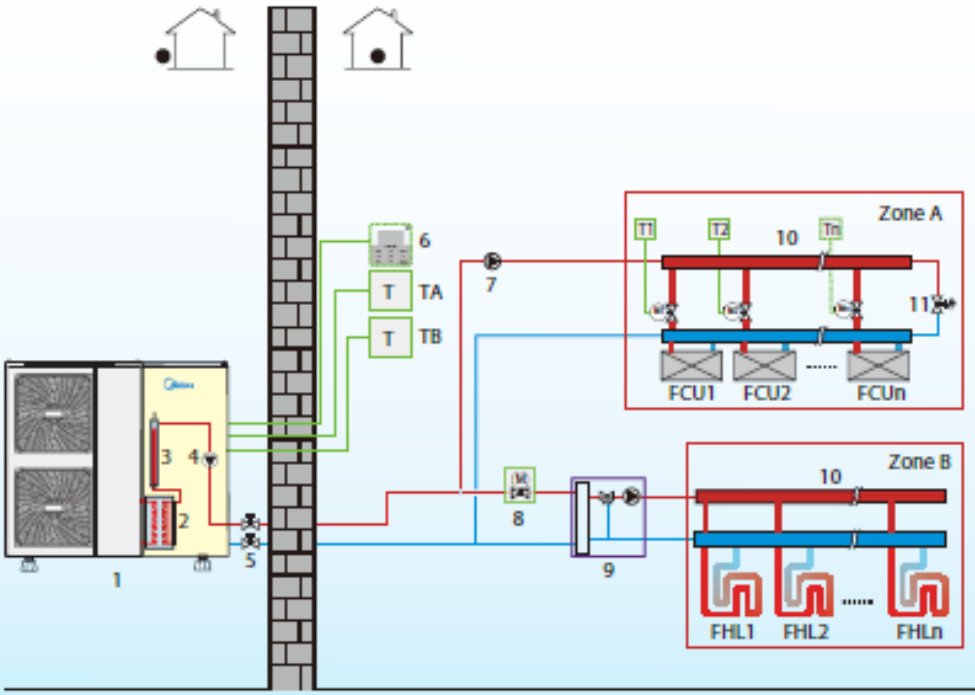


1 Outdoor unit
2 Plate heat exchanger
3 Backup heater
4 Inside circulation pump
5 Stop valve (field supply)
6 User interface
7 Outside circulate pump (field supply)
8 Motorized 2-way valve (field supply)
9 Mixing station (field supply)
10 Collector (field supply)
11 Bypass valve (field supply)
TA Thermostat for zone A (field supply)
TB Thermostat for zone B (field supply)
FHL 1...n Floor heating loop( field supply)
FCU 1...n Fan coil units (field supply)
M1...n Motorized valve (field supply)
T1...n Room thermostat (field supply)

# M-Thermal Split applications

## Application 1: M-Thermal Split unit for space heating only

The room thermostat is used as a switch. When there is a heating request from the room thermostat, the Split unit operates to achieve the target water temperature that set on the user interface. When the room temperature achieves the thermostat's set point, unit stops operation.

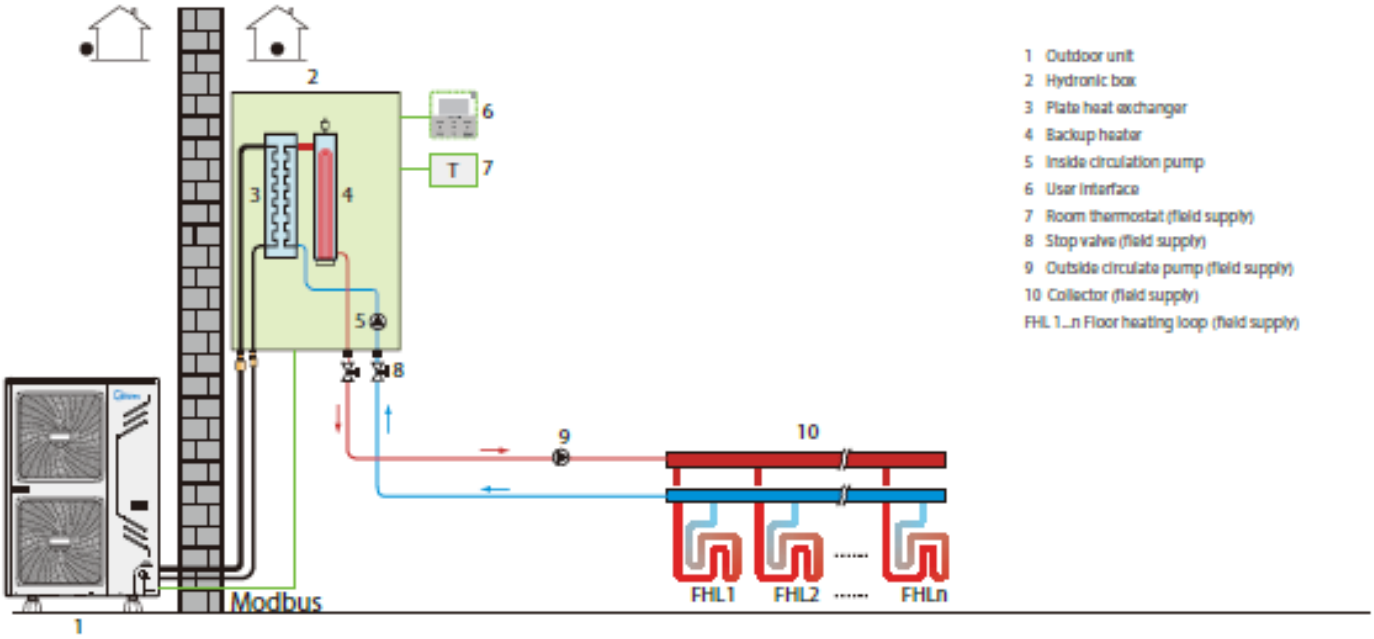


1 Outdoor unit
2 Hydronic box
3 Plate heat exchanger
4 Backup heater
5 Inside circulation pump
6 User interface
7 Room thermostat (field supply)
8 Stop valve (field supply)
9 Outside circulate pump (field supply)
10 Collector (field supply)
FHL 1...n Floor heating loop (field supply)

## Application 2: M-Thermal Split type unit for space heating and domestic hot water

Room thermostat is not connected to the indoor hydronic box but to motorized valve. Each room's temperature is regulated by the motorized valve on every water circuit. Sanitary hot water is delivered by the domestic hot water tank connected to the split indoor unit. In this situation, bypass valve is necessary.

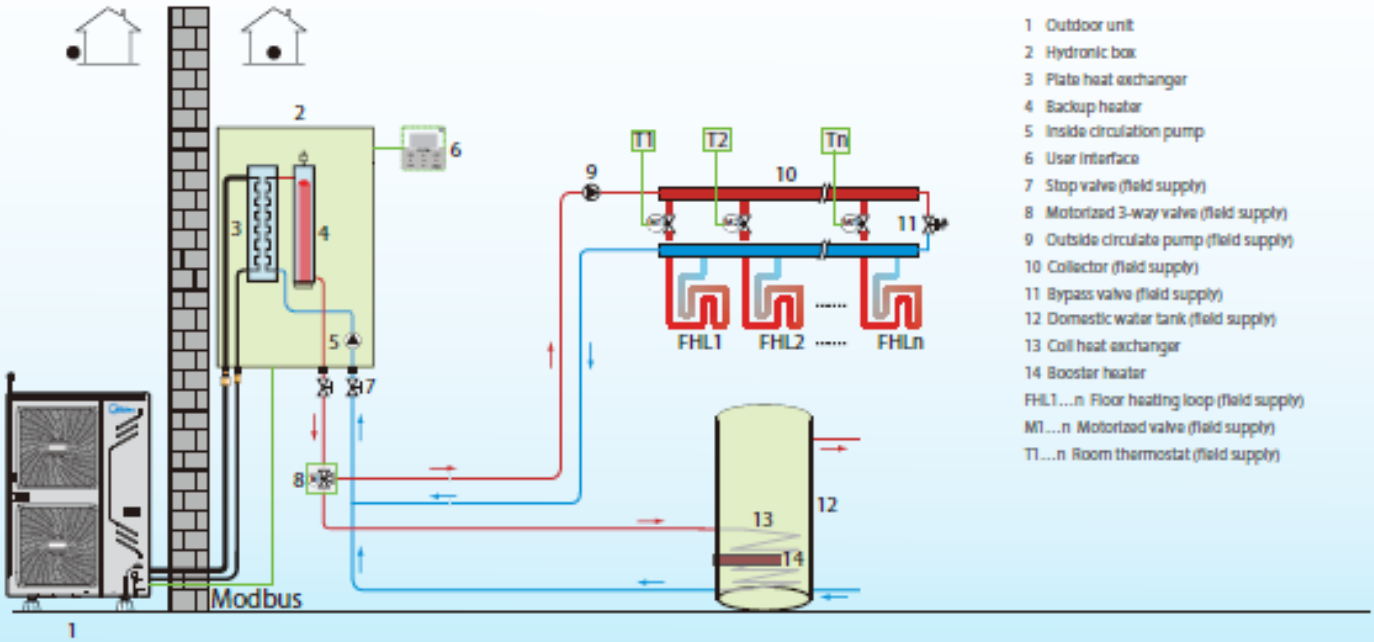


1 Outdoor unit
2 Hydronic box
3 Plate heat exchanger
4 Backup heater
5 Inside circulation pump
6 User interface
7 Stop valve (field supply)
8 Motorized 3-way valve (field supply)
9 Outside circulate pump (field supply)
10 Collector (field supply)
11 Bypass valve (field supply)
12 Domestic water tank (field supply)
13 Coil heat exchanger
14 Booster heater
FHL1....n Floor heating loop (field supply)
M1....n Motorized valve (field supply)
T1....n Room thermostat (field supply)

## Application 3: M-Thermal Split type unit for space heating, space cooling and domestic hot water

Floor heating coils and fan coil units are for space heating. Fan coil units used for space cooling. Sanitary hot water is delivered by the domestic hot water tank connected to the indoor hydronic box. The outdoor unit will switch to heating or cooling mode according to the temperature detected by the room thermostat. In space Cooling mode, the 2-way valve closes to prevent cold water entering to the floor heating loops.

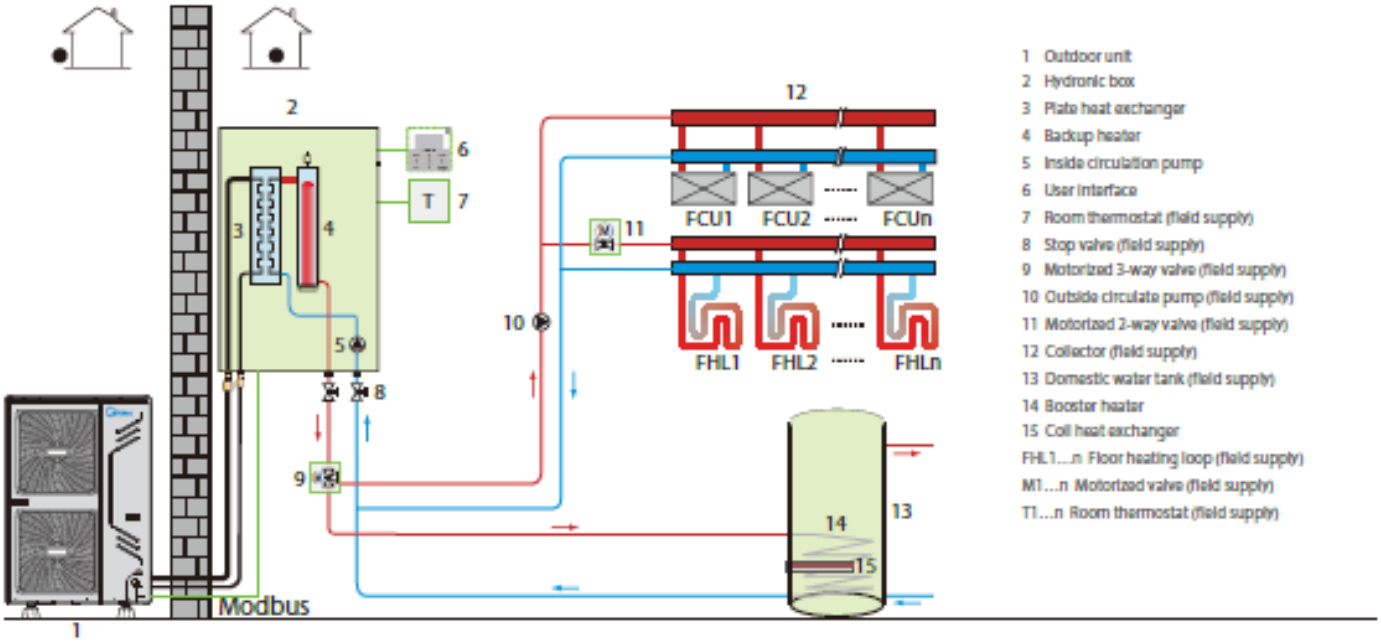


1 Outdoor unit
2 Hydronic box
3 Plate heat exchanger
4 Backup heater
5 Inside circulation pump
6 User interface
7 Room thermostat (field supply)
8 Stop valve (field supply)
9 Motorized 3-way valve (field supply)
10 Outside circulate pump (field supply)
11 Motorized 2-way valve (field supply)
12 Collector (field supply)
13 Domestic water tank (field supply)
14 Booster heater
15 Coil heat exchanger
FHL1...n Floor heating loop (field supply)
M1...n Motorized valve (field supply)
T1...n Room thermostat (field supply)

## Application 4: M-Thermal Split type unit for space heating and space cooling

Space cooling and heating application without a room thermostat connected to the indoor hydroni box, but with a heating only room thermostat controlling the floor heating and a heating/cooling thermostat controlling the fan coil units. Heating is provided through floor heating loops and fan coil units. Cooling is provided through the fan coil units only.

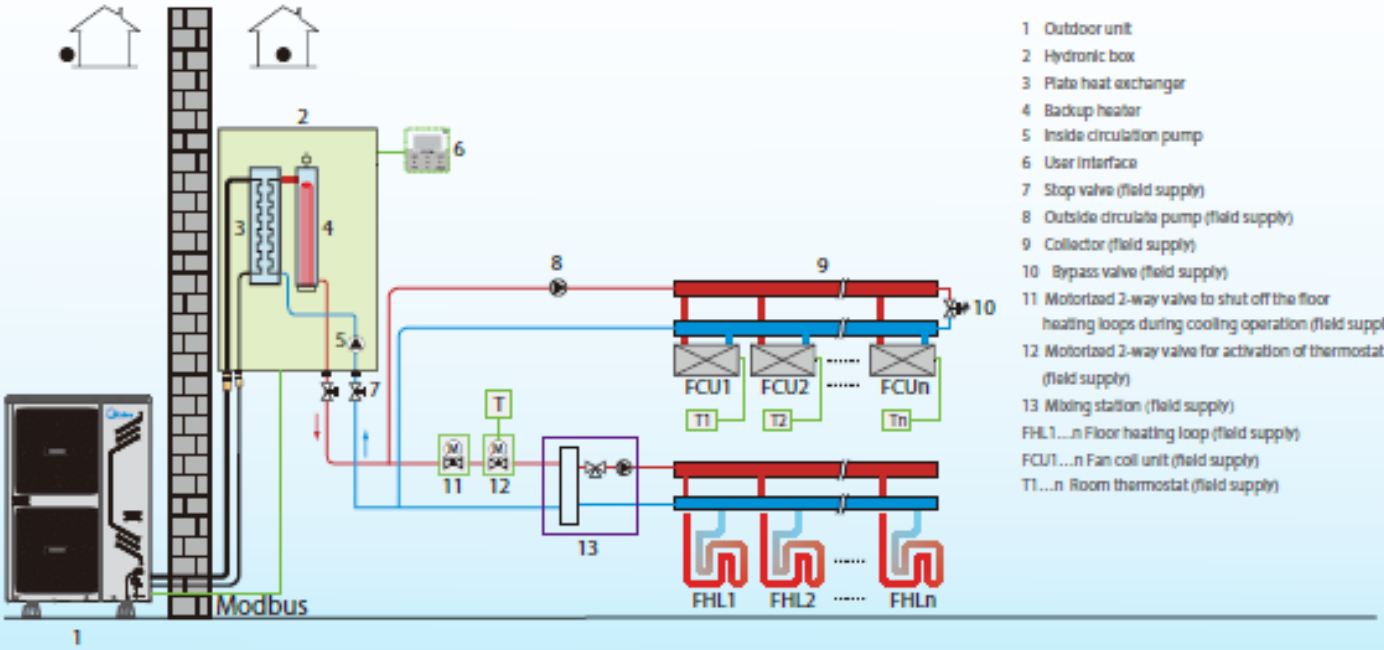


1 Outdoor unit
2 Hydronic box
3 Plate heat exchanger
4 Backup heater
5 Inside circulation pump
6 User interface
7 Stop valve (field supply)
8 Outside circulate pump (field supply)
9 Collector (field supply)
10 Bypass valve (field supply)
11 Motorized 2-way valve to shut off the floor heating loops during cooling operation (field supply)
12 Motorized 2-way valve for activation of thermostat (field supply)
13 Mixing station (field supply)
FHL1...n Floor heating loop (field supply)
FCU1...n Fan coil unit (field supply)
T1...n Room thermostat (field supply)

❖ Application 5: Bivalent application, M-Thermal Split type unit and auxiliary boiler for space heating and domestic hot water. Typically there are 3 application situations:

5-1 Auxiliary boiler only provide heating for space heating

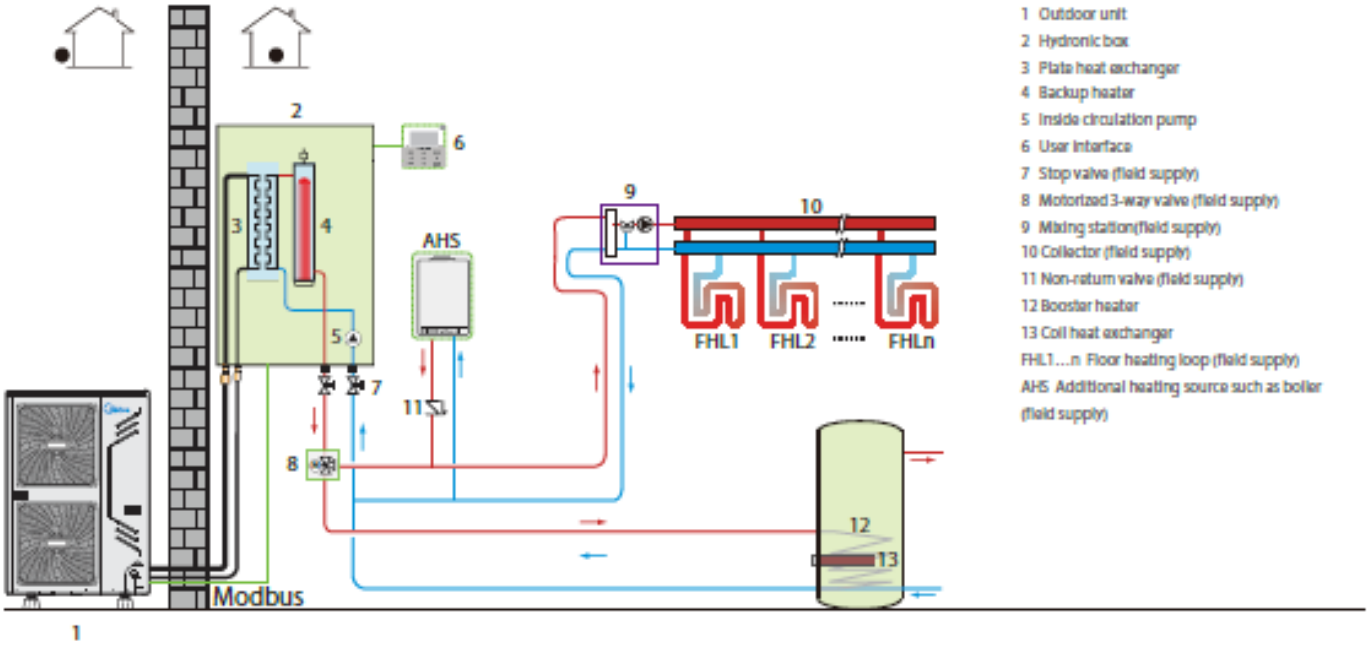


1 Outdoor unit
2 Hydronic box
3 Plate heat exchanger
4 Backup heater
5 Inside circulation pump
6 User interface
7 Stop valve (field supply)
8 Motorized 3-way valve (field supply)
9 Mixing station(field supply)
10 Collector (field supply)
11 Non-return valve (field supply)
12 Booster heater
13 Coil heat exchanger
FHL1…n Floor heating loop (field supply)
AHS Additional heating source such as boiler (field supply)

5-2 Auxiliary boiler provide heating for space heating and domestic hot water

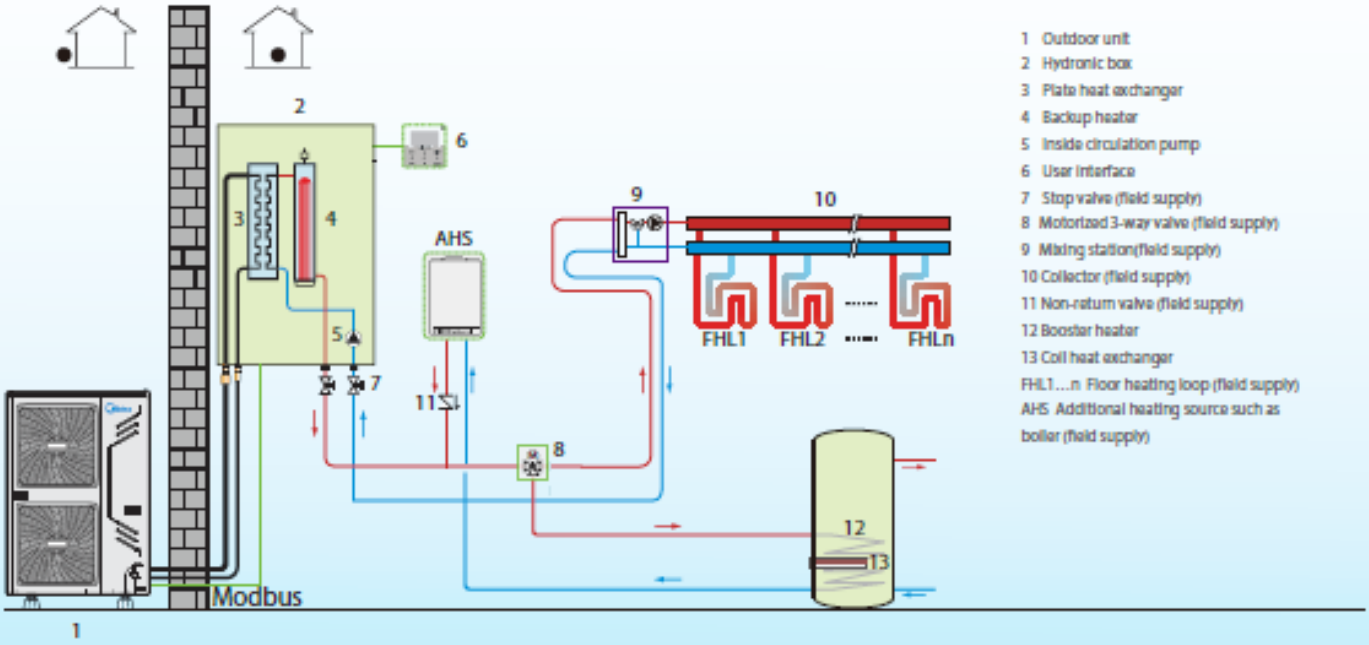


1 Outdoor unit
2 Hydronic box
3 Plate heat exchanger
4 Backup heater
5 Inside circulation pump
6 User interface
7 Stop valve (field supply)
8 Motorized 3-way valve (field supply)
9 Mixing station(field supply)
10 Collector (field supply)
11 Non-return valve (field supply)
12 Booster heater
13 Coil heat exchanger
FHL1…n Floor heating loop (field supply)
AHS Additional heating source such as boiler (field supply)

5-3 Auxiliary boiler reheats the water from the outdoor unit. An additional 3-way valve should be installed, when the water temperature from Mono unit is not high enough, the 3-way valve opens and the water flow through the boiler and be reheated.

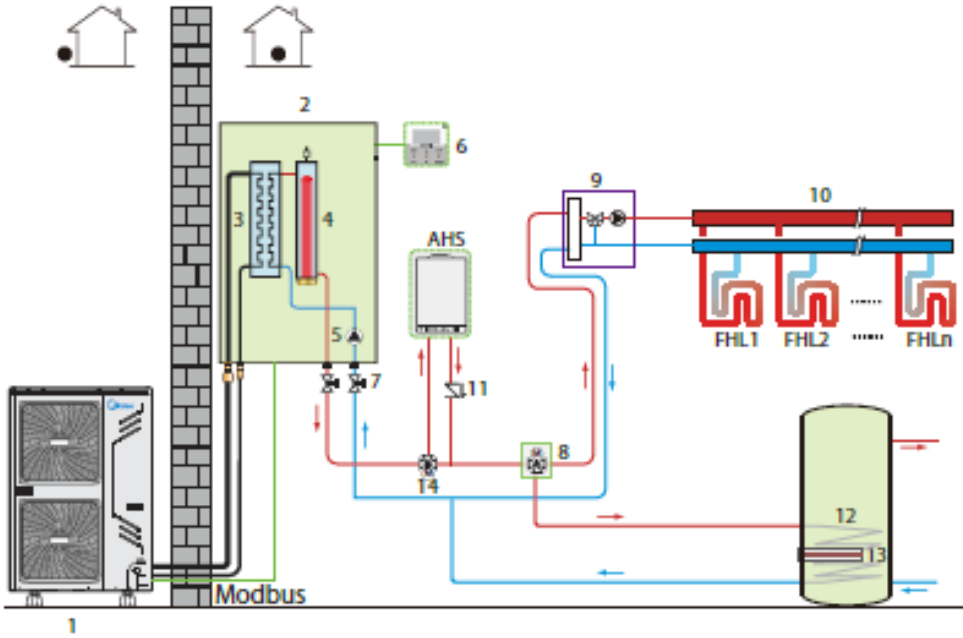


1 Outdoor unit
2 Hydronic box
3 Plate heat exchanger
4 Backup heater
5 Inside circulation pump
6 User interface
7 Stop valve (field supply)
8 Motorized 3-way valve (field supply)
9 Mixing station(field supply)
10 Collector (field supply)
11 Non-return valve (field supply)
12 Booster heater
13 Coil heat exchanger
14 Motorized 3-way valve (field supply)
FHL1...n Floor heating loop (field supply)
AHS Additional heating source such as boiler (field supply)

## Application 6: M-Thermal Split type unit for space heating through floor heating loops and fan coil units.

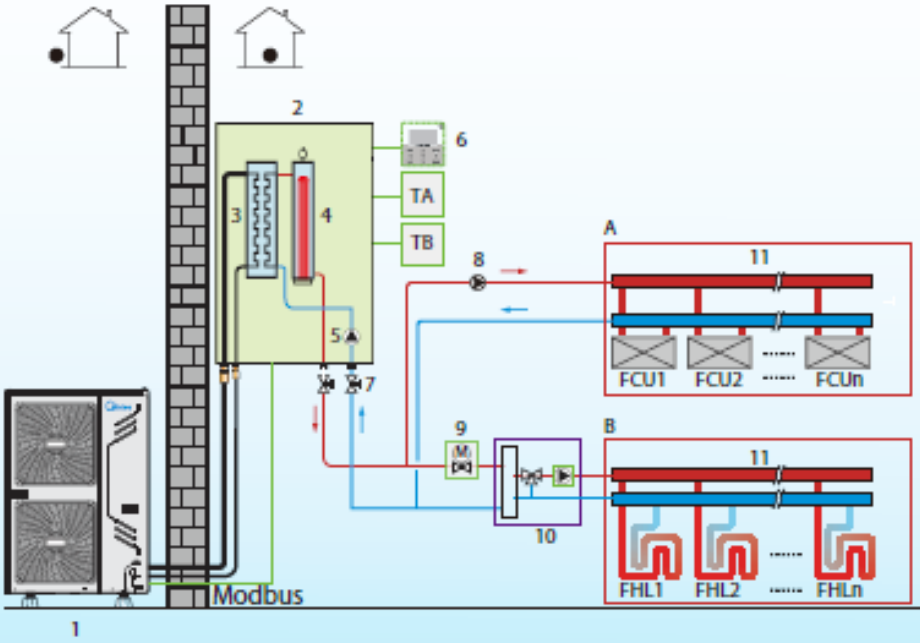


1 Outdoor unit
2 Hydronic box
3 Plate heat exchanger
4 Backup heater
5 Inside circulation pump
6 User interface
7 Stop valve (field supply)
8 Outside circulate pump (field supply)
9 Motorized 2-way valve (field supply)
10 Mixing pump (field supply)
11 Collector (field supply)
TA Room thermostat for zone A (field supply)
TB Room thermostat for zone B (field supply)
A Zone A
B Zone B
FHL1...n Floor heating loop (field supply)
FCU1...n Fan coil unit (field supply)

- Application 7: M-Thermal Split type unit for space heating and space cooling, Split type unit and solar pane both for domestic hot water

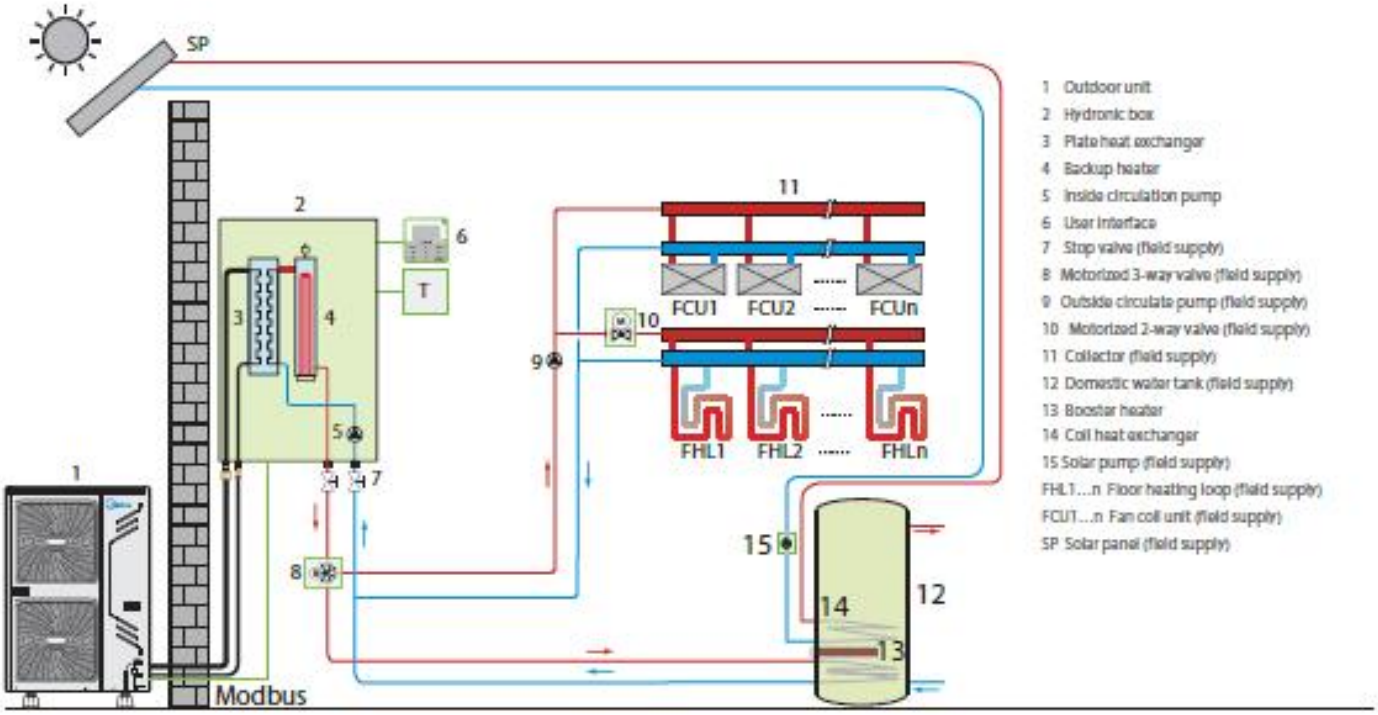


# Specifications

## Mono type

| Outdoor Mono type MHC- | | | V5W/D2N1 | V7W/D2N1 | V10W/D2N1 | V12W/D2N1 | V14W/D2N1 | V16W/D2N1 | V12W/D2RN1 | V14W/D2RN1 | V16W/D2RN1 |
|---|---|---|---|---|---|---|---|---|---|---|---|
| Heating[1] | Capacity | kW | 4.64 | 6.55 | 10.40 | 12.13 | 14.75 | 16.38 | 12.33 | 14.08 | 16.30 |
| | Rated input | kW | 0.97 | 1.45 | 2.23 | 2.63 | 3.42 | 4.02 | 2.72 | 3.24 | 3.89 |
| | COP | | 4.79 | 4.52 | 4.66 | 4.61 | 4.31 | 4.08 | 4.54 | 4.35 | 4.19 |
| Heating[2] | Capacity | kW | 4.72 | 6.72 | 10.20 | 12.57 | 14.06 | 16.13 | 11.97 | 14.09 | 16.08 |
| | Rated input | kW | 1.44 | 2.01 | 3.05 | 3.86 | 4.45 | 5.22 | 3.67 | 4.43 | 5.24 |
| | COP | | 3.29 | 3.35 | 3.35 | 3.26 | 3.16 | 3.09 | 3.25 | 3.18 | 3.07 |
| Cooling[3] | Capacity | kW | 4.77 | 6.63 | 10.40 | 12.23 | 14.17 | 14.93 | 12.68 | 14.05 | 15.13 |
| | Rated input | kW | 1.01 | 1.46 | 2.08 | 2.60 | 3.18 | 3.64 | 2.72 | 3.24 | 3.75 |
| | COP | | 4.72 | 4.53 | 5.00 | 4.70 | 4.46 | 4.10 | 4.67 | 4.34 | 4.03 |
| Cooling[4] | Capacity | kW | 4.65 | 6.69 | 9.90 | 12.21 | 12.90 | 13.75 | 12.27 | 13.83 | 15.27 |
| | Rated input | kW | 1.56 | 2.48 | 3.09 | 4.14 | 4.50 | 5.13 | 4.22 | 5.12 | 6.42 |
| | COP | | 2.98 | 2.70 | 3.20 | 2.95 | 2.89 | 2.68 | 2.91 | 2.70 | 2.38 |
| Seasonal space heating energy eff. Class (average climate general) | Water outlet @ 35℃ | | A++ | A++ | A++ | A++ | A++ | A++ | A++ | A++ | A++ |
| | Water outlet @ 55℃ | | A+ | A+ | A+ | A+ | A++ | A+ | A+ | A++ | A++ |
| Power supply | | V/Ph/Hz | 220-240/1/50 | | | | | | 380-415/3/50 | | |
| Compressor | Type | | Twin-rotary Inverter | | | | | | | | |
| Outdoor fan | Motor type | | Brushless DC motor | | | | | | | | |
| | Air flow | m³/h | 3050 | | 6150 | | | | 6150 | | |
| Air side heat exchanger | | | Fin-coil | | Fin-coil | | | | Fin-coil | | |
| Water side heat exchanger | | | Plate type heat exchanger | | | | | | | | |
| Water pump head | | m | 6 | | 7.5 | | | | 7.5 | | |
| Expansion tank volume | | L | 2 | | 5 | | | | 5 | | |
| Refrigerant | Type | | R410A | | R410A | | | | R410A | | |
| | Charged volume | kg | 2.4 | | 3.6 | | | | 3.6 | | |
| Throttle type | | | Electronic expansion valve | | | | | | | | |
| Backup electric heater | Standard mounted | kW | / | | 3 | | | | 4.5 | | |
| | Optional | kW | 3 | | 4.5 | | | | / | | |
| | Capacity steps | | 1 | | 2 | | | | 1 | | |
| | Power supply | V/Ph/Hz | 220-240/1/50 | | 220-240/1/50 | | | | 380-415/3/50 | | |
| Sound pressure | Heating | dB(A) | 52 | 62 | 65 | 67 | 71 | 72 | 67 | 71 | 72 |
| | Cooling | dB(A) | 63 | 63 | 64 | 66 | 70 | 71 | 66 | 70 | 71 |
| Unit net dimension(WxHxD) | | mm | 1210x945x402 | | 1404x1414x405 | | | | 1404x1414x405 | | |
| Unit packing dimension(WxHxD) | | mm | 1500x1140x450 | | 1475x1580x440 | | | | 1475x1580x440 | | |
| Net/Gross weight | | kg | 99/177 | | 162/183 | | | | 177/198 | | |
| Water piping connections Dia. | | inch | 1" Femal BSP | | 1-1/4" Femal BSP | | | | 1-1/4" Femal BSP | | |
| Safety valve | | MPa | 0.3 | | 0.3 | | | | 0.3 | | |
| Total water volume | | L | 2 | | 5.5 | | | | 5.5 | | |
| Ambient temperature range (Heat pump) | Cooling | ℃ | -5~46 | | | | | | | | |
| | Heating | ℃ | -20-35 | | | | | | | | |
| | Domestic hot water | ℃ | -20-43 | | | | | | | | |
| Water outlet temperature range | Cooling | ℃ | 5~25 | | | | | | | | |
| | Heating | ℃ | 25~60 | | | | | | | | |
| | Domestic hot water | ℃ | 40~60 | | | | | | | | |

Nominal capacity is based on the following conditions:

1. Evaporator air in 7℃ ℃85% R.H., Condenser water in/out 30/35℃
2. Evaporator air in 7℃ ℃85% R.H., Condenser water in/out 40/45℃
3. Condenser air in 35℃, Evaporator water in/out23/18℃
4. Condenser air in 35℃, Evaporator water in/out 12/7℃
5. At 1m in open field fan side (sound pressure)
6. The above data test reference standard EN14511:2013; EN14825:2013; ENs0564:2011; EN12102:2011; (EU)No:811:2013; (EU)No:813:2013; OJ 2014/C 207/02:2014

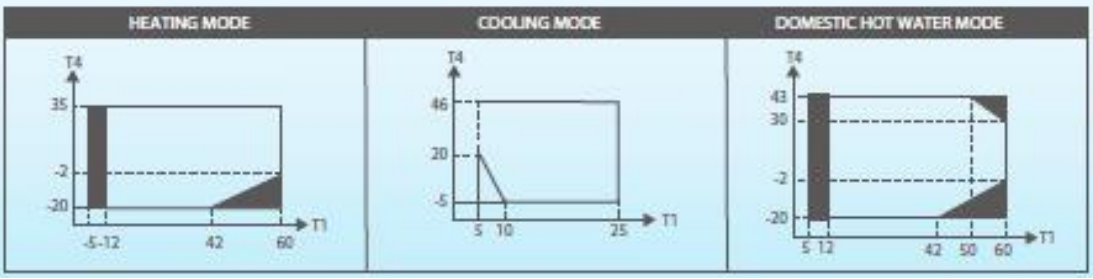


T4 Ambient temperature(℃)
T1 Water flow temperature(℃)
•No heat pump operation, backup electric heater or boiler only.

# Split type

| Outdoor Split type MHA- | | | | V4W/D2N1 | V6W/D2N1 | V8W/D2N1 | V10W/D2N1 | V12W/D2N1 | V14W/D2N1 | V16W/D2N1 | V12W/D28N1 | V14W/D28N1 | V16W/D28N1 |
|---|---|---|---|---|---|---|---|---|---|---|---|---|---|
| Heating[1] | Capacity | | kW | 4.10 | 6.10 | 8.00 | 10.00 | 12.10 | 14.00 | 15.50 | 12.10 | 14.00 | 15.50 |
| | Rated Input | | kW | 0.82 | 1.29 | 1.73 | 2.17 | 2.74 | 3.39 | 3.82 | 2.68 | 3.26 | 3.79 |
| | COP | | | 5.00 | 4.73 | 4.62 | 4.61 | 4.42 | 4.13 | 4.06 | 4.51 | 4.29 | 4.09 |
| Heating[2] | Capacity | | kW | 4.01 | 5.96 | 7.34 | 10.12 | 11.85 | 14.05 | 16.05 | 11.97 | 13.93 | 15.48 |
| | Rated Input | | kW | 1.13 | 1.68 | 2.13 | 2.93 | 3.48 | 4.41 | 5.03 | 3.50 | 4.21 | 4.87 |
| | COP | | | 3.55 | 3.55 | 3.45 | 3.45 | 3.41 | 3.19 | 3.19 | 3.42 | 3.31 | 3.18 |
| Cooling[1] | Capacity | | kW | 4.10 | 6.10 | 8.00 | 10.00 | 11.80 | 13.00 | 14.00 | 12.10 | 13.00 | 14.00 |
| | Rated Input | | kW | 0.79 | 1.31 | 1.78 | 2.07 | 2.65 | 3.23 | 3.62 | 2.82 | 3.21 | 3.68 |
| | EER | | | 5.19 | 4.66 | 4.49 | 4.83 | 4.45 | 4.02 | 3.87 | 4.29 | 4.05 | 3.80 |
| Cooling[2] | Capacity | | kW | 4.12 | 6.15 | 6.44 | 9.39 | 11.02 | 12.49 | 12.85 | 11.70 | 12.53 | 12.91 |
| | Rated Input | | kW | 1.30 | 2.08 | 2.24 | 3.26 | 4.17 | 5.07 | 5.39 | 4.65 | 5.21 | 5.52 |
| | EER | | | 3.17 | 2.96 | 2.88 | 2.88 | 2.64 | 2.46 | 2.38 | 2.52 | 2.40 | 2.34 |
| Seasonal space heating energy eff. Class (average climate general) | Water outlet @ 35°C | | | A++ | | | | | | | | | |
| | Water outlet @ 55°C | | | A+ | | | | | | | | | |
| Power supply | | | V/Ph/Hz | 220-240/1/50 | | | | | | | 380-415/3/50 | | |
| Dimension (WxHxD)Z | | | mm | 975x862x355 | | 1074x964x396 | 900x1327x320 | | | | 900x1327x320 | | |
| Packing (WxHxD) | | | mm | 1020x915x410 | | 1120x1015x435 | 1016x1377x435 | | | | 1016x1377x435 | | |
| Net/gross weight | | | kg | 56.8/64 | | 73.8/85 | 109/121 | | | | 109/121 | | |
| Sound pressure level[5] | Cooling | | dB(A) | 62 | | 64 | 65 | 66 | 69 | 71 | 66 | 69 | 71 |
| | Cooling | | dB(A) | 62 | | 64 | 65 | 66 | 69 | 71 | 66 | 69 | 71 |
| Compressor | Type | | | Twin-rotary Invertar | | | | | | | | | |
| Outdoor fan | Type | | | Brushless DC motor | | | | | | | | | |
| | Air flow | | $m^3/h$ | 3180 | | 5120 | 6500 | | | | | | |
| Air side heat exchanger | | | | Fin-coil | | | 6500 | | | | | | |
| Piping connections | Liquid | Type | | Flaring | | | | | | | | | |
| | | Dia.(OD) | mm | Φ9.5 | | | | | | | | | |
| | Gas | Type | | Flaring | | | | | | | | | |
| | | Dia.(OD) | mm | Φ15.9 | | | | | | | | | |
| | Piping length | Min. | m | 2 | | | | | | | | | |
| | | Max. | m | 20 | | 30 | 50 | | | | 50 | | |
| | Installition height difference | outdoor unit upside | m | 10 | | 20 | 30 | | | | 30 | | |
| | | outdoor unit downside | m | 8 | | 15 | 25 | | | | 25 | | |
| Refrigerant | Type | | | R410A | | | | | | | | | |
| | Charged volume | | kg | 2.5 | | 2.8 | 3.9 | | | | 4.2 | | |
| Throttle type | | | | Electric expansion valve | | | | | | | | | |
| Ambient temperature range | Cooling | | ℃ | -5~46 | | | | | | | | | |
| | Heating | | ℃ | -20~35 | | | | | | | | | |
| | Sanitary hot water | | ℃ | -20~43 | | | | | | | | | |

Nominal capacity is based on the following conditions:

1. Evaporator air in 7℃ ℃85% R.H., Condenser water in/out 30/35℃
2. Evaporator air in 7℃ ℃85% R.H., Condenser water in/out 40/45℃
3. Condenser air in 35℃. Evaporator water in/out23/18℃
4. Condenser air in 35℃. Evaporator water in/out 12/7℃
5. At 1m in open field fan side (sound pressure)
6. The above data test reference standard EN14511:2013; EN14825:2013; EN50564:2011; EN12102:2011; (EU)No:811:2013; (EU)No:813:2013; OJ 2014/C 207/02:2014

## Hydronic box

| Hydronic box | | | | SMK-80/CD30GN1 (For use with MHA-V4/6/8W/D2N1) | SMK-160/CD30GN1-B (For use with MHA-V10/12/14/16W/D2N1) | SMK-160/CSD45GN1-B (For use with MHA-V12/14/16W/D2RN1) |
|---|---|---|---|---|---|---|
| Type | | | | Heating&Cooling | | |
| Leaving water temperature range | Space heating | Low | ℃ | 25~55, default 35 | | |
| | | High | ℃ | 35~60, default 45 | | |
| | Space cooling | Low | ℃ | 7~25, default 7 | | |
| | | High | ℃ | 18~25, default 18 | | |
| | Sanitary hot water | | ℃ | 40~60, default 45 | | |
| Power supply | | | V/Ph/Hz | 220-240/1/50 | 220-240/1/50 | 380-415/3/50 |
| Dimension (WxHxD) | | | mm | 400×865×427 | 400×865×427 | 400×865×427 |
| Packing (WxHxD) | | | mm | 495×1040×495 | 495×1040×495 | 495×1040×495 |
| Net/gross weight | | | kg | 43/51 | 54/62 | 54/62 |
| Water circuit | Piping connections Dia. | | mm | DN25 | DN25 | DN25 |
| | Safety valve | | kPa | 300 | 300 | 300 |
| | Total water volume | | L | 4.7 | 5.0 | 5.0 |
| | Drainage pipe | | mm | Φ16 | Φ16 | Φ16 |
| | Expansion tank | Volume | L | 3 | 3 | 3 |
| | | Max. water pressure | kPa | 800 | 800 | 800 |
| | | Pre pressure | kPa | 150 | 150 | 150 |
| | Water side heat exchanger | Type | | Plate type heat exchanger | Plate type heat exchanger | Plate type heat exchanger |
| | | Volume | L | 0.7 | 1.0 | 1.0 |
| | Water pump head | | m | 6 | 7.5 | 7.5 |
| Refrigerant circuit | Liquid side Dia. | | mm | Φ9.5 | Φ9.5 | Φ9.5 |
| | Gas side Dia. | | mm | Φ15.9 | Φ15.9 | Φ15.9 |
| Mounted Back-up electric heater | Size | | kW | 3.0 | 3.0 | 4.5 |
| | Step | | | 2 | 2 | 2 |
| | Power supply | | | 220-240/1/50 | 220-240/1/50 | 380-415/3/50 |

Nominal capacity is based on the following conditions:

1. Condition 1: Heating mode air inlet at 7℃ and water outlet at 35℃ with ΔT at 5℃, Cooling mode air inlet at 35℃ and water outlet at 18℃ with ΔT at 5℃
2. Condition 2: Heating mode air inlet at 7℃ and water outlet at 45℃ with ΔT at 5℃, Cooling mode air inlet at 35℃ and water outlet at 7℃ with ΔT at 5℃
3. Noise level is test at 1m in open field fan side, in heating mode with air inlet at 7℃ and water outlet at 35℃ with ΔT at 5℃.
4. The above data test reference standard EN14511

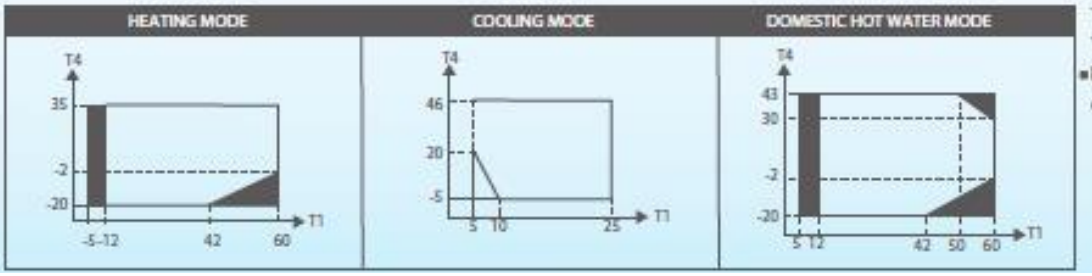


T4 Ambient temperature(℃)
T1 Water flow temperature(℃)
▪No heat pump operation, backup electric heater or boiler only.